NOTES:

GEARBOXES, COUPLINGS, AND DRIVE SHAFTS ARE SUPPLIED BY GENCOAT.

DRIVESTAND LAYOUT IS PRELIMINARY PENDING RECEIPT OF CERTIFIED MOTOR DRAWINGS.

MOTORS ARE SUPPLIED BY OTHERS.

ALL DIMENSIONS ARE PRELIMINARY.

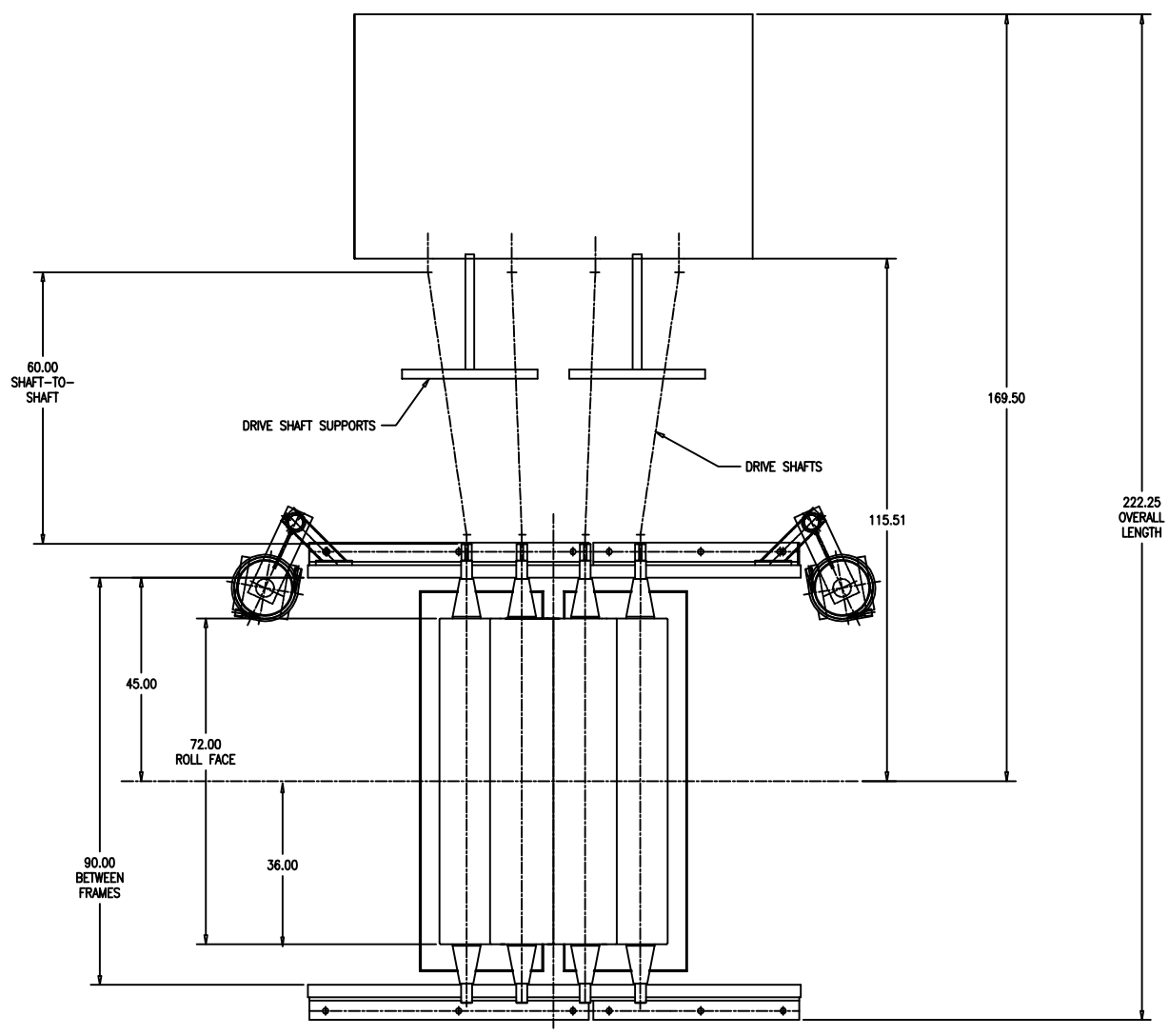

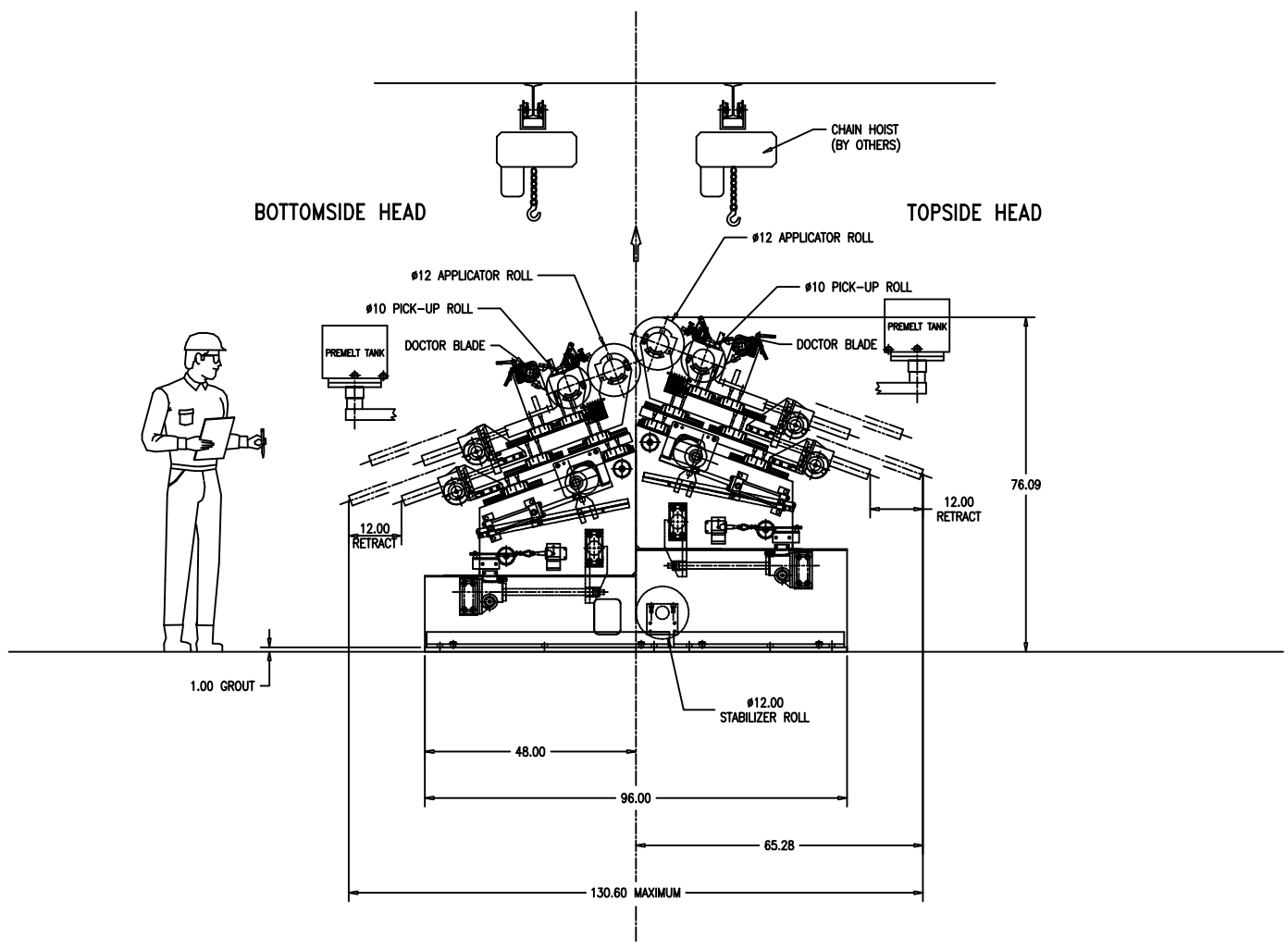

ZONE	REV	DESCRIPTION	DATE	APPROVED

REVISIONS

STANDARD TOLERANCES
UNLESS OTHERWISE SPECIFIED
DIMENSIONS: DECIMAL ONE PLACE ±.10" TWO PLACE ±.02" THREE PLACE ±.010" ANGLE ±1/2° | MM ±2.5mm ±0.5 mm ±0.10 mm ±1/2°

CONFIDENTIAL

THIS DRAWING AND THE INFORMATION CONTAINED HEREIN IS THE PROPERTY OF GENCOAT INC. THE REPRODUCTION/COPYING OR DISCLOSURE OF THIS DRAWING TO OTHERS WITHOUT WRITTEN AUTHORIZATION IS PROHIBITED. THIS DRAWING AND ANY COPIES THEREOF, SHALL BE RETURNED TO GENCOAT, IN FURNISHING THIS DRAWING, GENCOAT MAKES NO REPRESENTATION OR WARRANTIES REGARDING THE ACCURACY OF THE DRAWING OR THE ACCEPTANCE OF ANY MATERIAL THE DRAWING OR THE ACCOMPANYING MATERIAL THE UNITED STATES AND/OR FOREIGN COPYRIGHTS OR PATENTS.

DIMENSIONS INCH [MM]

DRAWN BY	CHECKED BY	PROJECT ENG.
CKM		
REFERENCE NO.	DATE	
QS-3385-D	8/4/06	
ORIG. WORK ORDER NO.		

3RD ANGLE PROJECTION

GTS
Sussex, Wisconsin
(262) 691-0400

TITLE
VERTICAL WAXER
PROPOSAL

SCALE: 1:20

DWG NO.
QS-3711-D

SHEET: 1 OF 1