NOTES:

GEARBOXES, COUPLINGS, DRIVESHAFTS, MOTORS, HPU, BACK-UP/TURN DRUMS AND ALL ROLLS ARE EXSISTING.

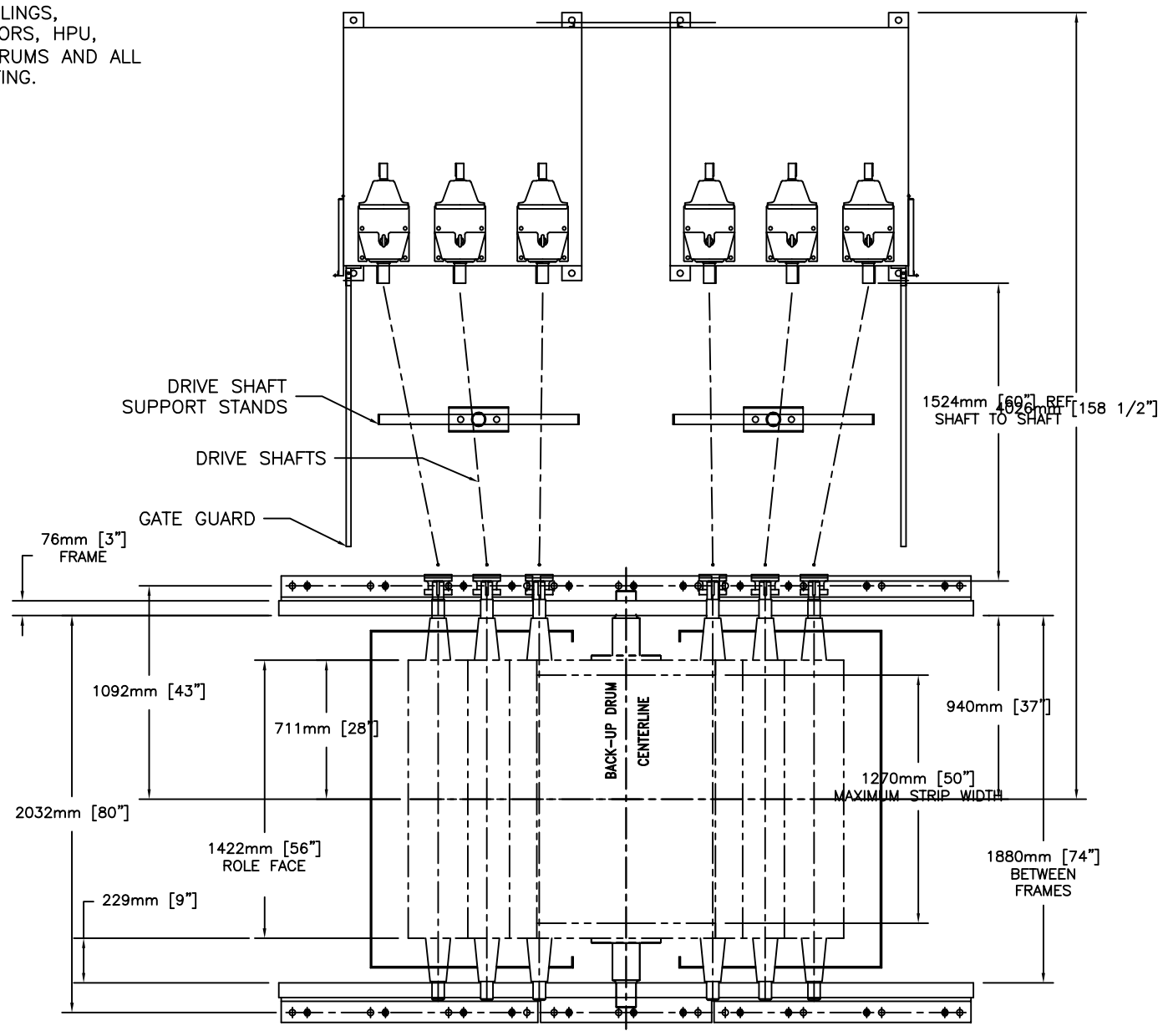

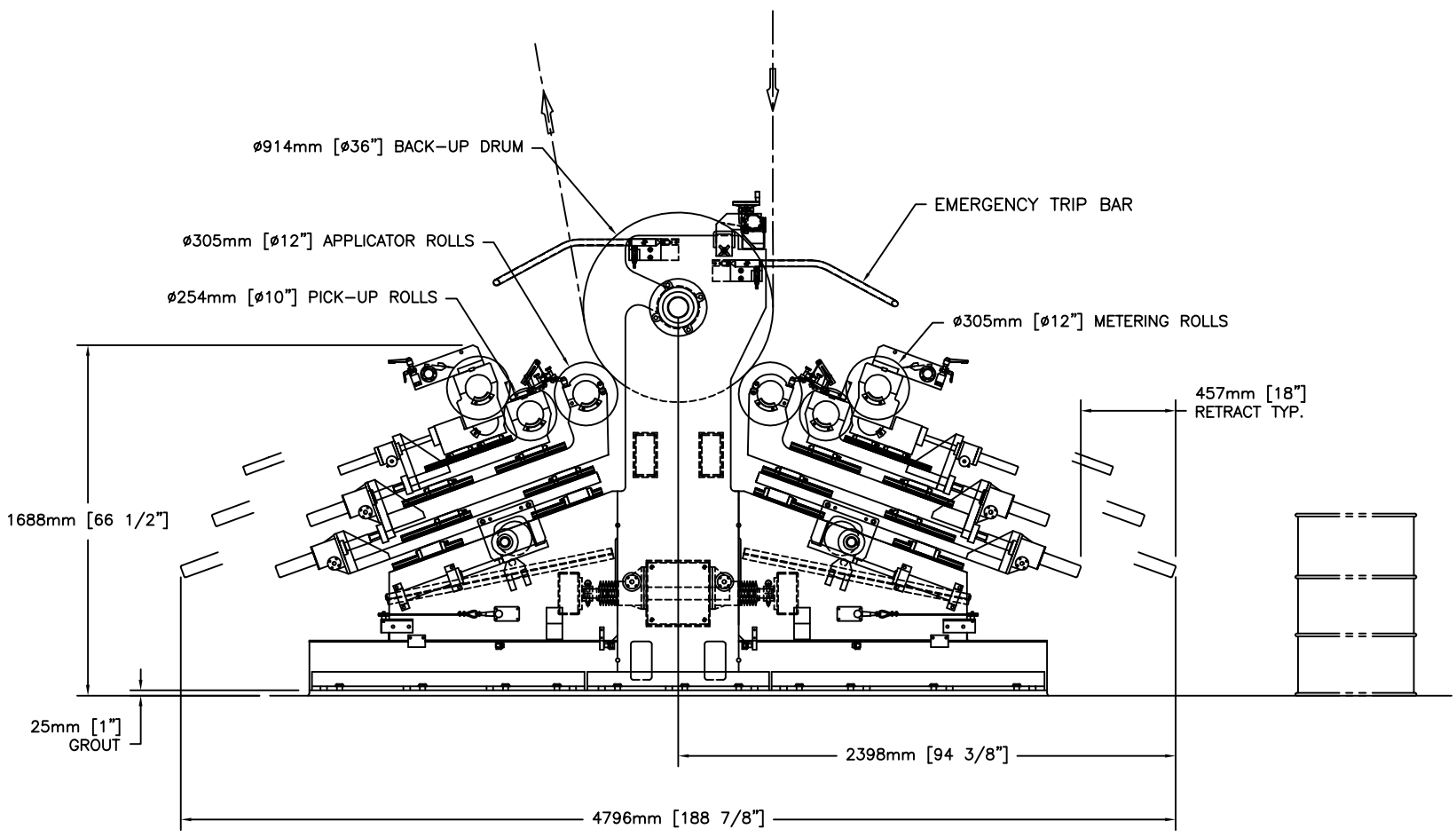

OPERATOR SIDE

ZONE	REV	DESCRIPTION	DATE	APPROVED

REVISIONS

STANDARD TOLERANCES UNLESS OTHERWISE SPECIFIED

DECIMAL DIMENSIONS:		
ONE PLACE	±.10"	±2.5mm
TWO PLACE	±.02"	±0.5 mm
THREE PLACE	±1/2°	±1/2°
ANGLE		

CONFIDENTIAL

THIS DRAWING AND THE INFORMATION CONTAINED HEREIN ARE THE PROPERTY OF GEORGE MC-CLOSKEY INTERNATIONAL/COPPUS, OR DISCLOSURE OF THIS DRAWING TO OTHERS WITHOUT WRITTEN AUTHORIZATION IS PROHIBITED. THIS DRAWING, AND ANY COPIES THEREOF, SHALL BE RETURNED TO GEORGE MC-CLOSKEY INTERNATIONAL/COPPUS UPON REQUEST. NO REPRODUCTIONS OF WARRANTIES REGARDING THE COVERED BY THE AGREEMENTS AND/OR PROCUREMENT ORDERS BY THE UNITED STATES AND/OR FOREIGN COPYRIGHTS OR PATENTS.

DIMENSIONS INCH [MM]

DRAWN BY	CHECKED BY	PROJECT ENG.
RWB	RW	RW
DATE 5/1/02		

DWG. WORK ORDER NO.

REFERENCE NO.

3RD ANGLE PROJECTION

SCALE: 1:16

DWG NO. QS-3019-D

SHEET: 1 OF 1

TITLE FINISH 'A' COATER PROPOSAL

GMC Sussex, Wisconsin (262) 691-0400