NOTES:

GEARBOXES, COUPLINGS, AND DRIVE SHAFTS SUPPLIED BY GFG.

DRIVESTAND LAYOUT IS PRELIMINARY PENDING RECEIPT OF CERTIFIED MOTOR DRAWINGS.

MOTORS SUPPLIED BY OTHERS.

ESTIMATED WEIGHT OF EACH DRIVE STAND WITHOUT MOTORS 545 kgs [1200 lbs]

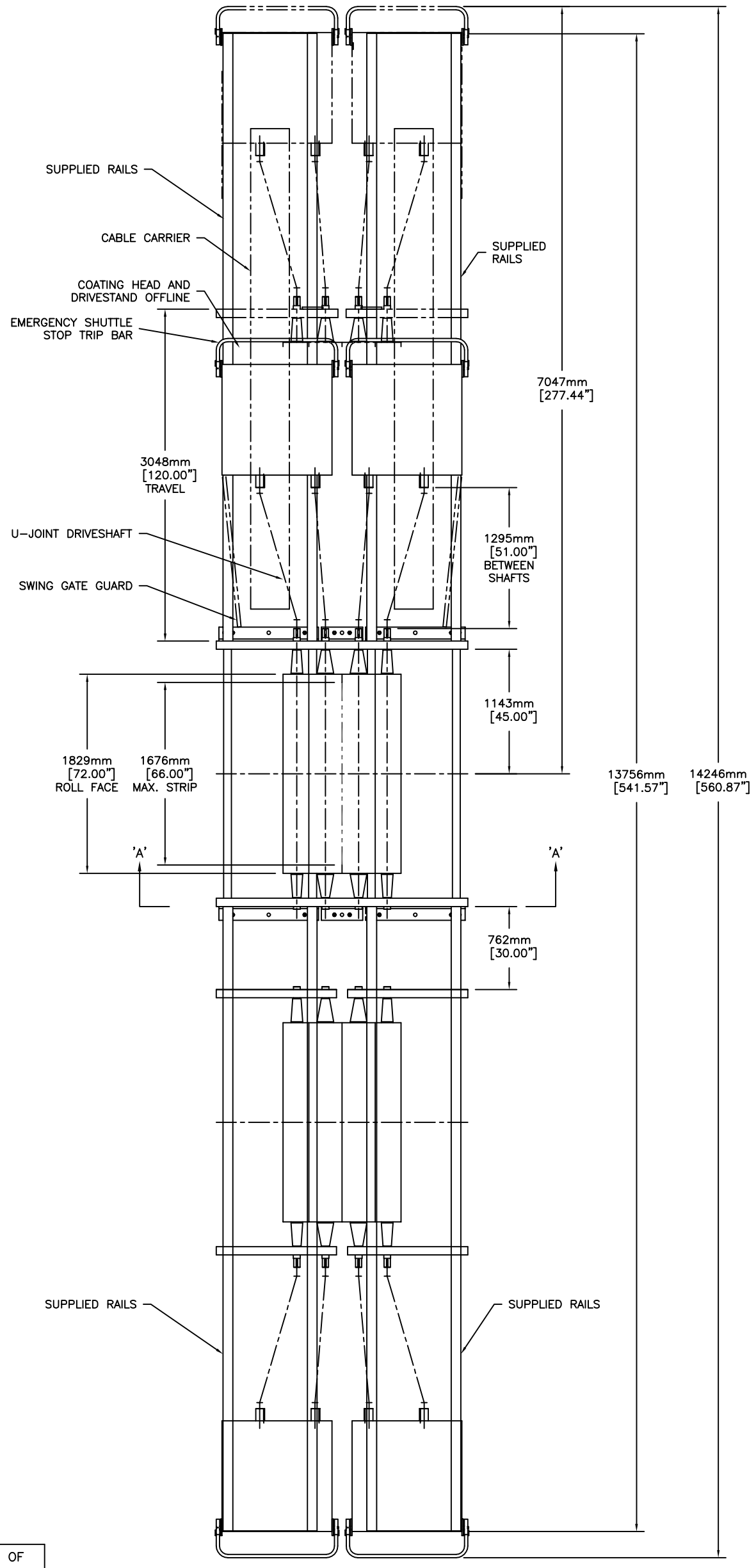

ESTIMATED WEIGHT OF COATER 13640 kgs [30,000 lbs]

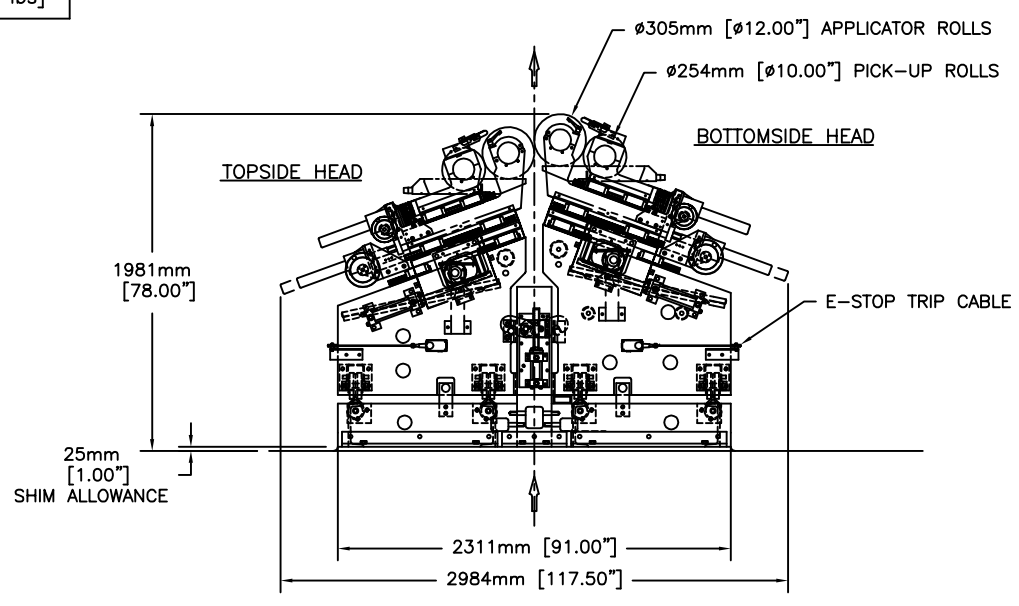

VIEW 'A' – 'A'
(OPERATOR SIDE)

ZONE	REV	DESCRIPTION	DATE	APPROVED

REVISIONS

STANDARD TOLERANCES UNLESS OTHERWISE SPECIFIED
DECIMAL DIMENSIONS: ONE PLACE ±.10" TWO PLACE ±.030" THREE PLACE ±.015" ANGLE ±1/2°
MM: ±2.5mm ±0.8 mm ±0.5 mm ±1/2°

CONFIDENTIAL

THIS DRAWING AND THE INFORMATION CONTAINED HEREIN ARE THE EXCLUSIVE PROPERTY OF GEOCOAT INC. REPRODUCTION/COPYING OR DISCLOSURE OF THIS DRAWING TO OTHERS WITHOUT WRITTEN PERMISSION IS PROHIBITED. THIS DRAWING, AND ANY COPIES THEREOF, SHALL BE RETURNED TO GEOCOAT, IN A TURNAROUND TIME DEMANDED BY GEOCOAT, IN A TURNAROUND TIME DEMANDED BY GEOCOAT, IF REQUESTED. GEOCOAT MAKES NO REPRESENTATIONS OR WARRANTIES REGARDING THE DRAWING OR THE INFORMATION CONTAINED IN THE DRAWING, AND ASSUMES NO LIABILITY FOR DAMAGES ARISING OUT OF THE USE OF THE DRAWING OR ANY PART THEREOF. THE DRAWING IS PROTECTED BY UNITED STATES AND/OR FOREIGN COPYRIGHTS OR PATENTS.

DIMENSIONS INCH [MM]

DRAWN BY CKM — DATE 7/11/08
CHECKED BY — PROJECT ENG.
REFERENCE NO. QS-3894-D
ORIG. WORK ORDER NO.

3RD ANGLE PROJECTION

SCALE 1:22

TITLE VERTICAL SHUTTLE COATER PROPOSAL DRAWING

DWG NO. QS-4008-D

SHEET: 1 OF 1

GFG Sussex, Wisconsin (262) 691-0400